IVC-V3 Ultra



CE

Exclusive distribution partner (Europe): HTG Europe GmbH

Im Fisserhook 7, 46395 Bocholt, Germany

Phone: (+49) 2871 – 247580

Email: info@htgeurope.com

Manufacturer:

High Tech Grinding Systems Co., Ltd

Fujian Xingyi Intelligent Equipment Co., Ltd

Factory: No. 34, Juxian Road, AnPing Development Area, Jinjiang, Quanzhou City, Fujian Province, China

Revision Index			
Date	Rev.	Description of Change	Employee
03/18/26	1	User manual created	PB

This operating manual was created by HTG Europe GmbH. It was prepared to the best of our knowledge, and any changes to the original version are listed here.

If you notice any errors or ambiguities, please let us know. We also welcome any comments or suggestions.

Please contact:

HTG Europe GmbH Im
Fisserhook 7
D-46395 Bocholt
Phone: +49 (0) 2871 / 24 75 80
Email: info@htgeurope.com

Keep this operating manual handy near the machine. It must be included if the machine is sold.

1 Contents

1 Contents ..... - 3 -
2 Notes on Reading ..... - 7 -
2.1 Intended Users of the Operating Instructions ..... - 7 -
2.2 Abbreviations, Synonyms, Symbols ..... - 7 -
2.3 Safety-related information ..... - 8 -
2.3.1 Overview ..... - 8 -
2.3.2 Safety Chapter ..... - 8 -
2.3.3 Warnings ..... - 8 -
2.4 External Documents ..... - 9 -
3 Safety ..... - 10 -
3.1 Intended Use ..... - 10 -
3.2 Legal Regulations ..... - 11 -
3.2.1 Modifications ..... - 11 -
3.2.2 Improper use ..... - 12 -
3.2.3 Applicable guidelines ..... - 12 -
3.2.4 Sales outside the European Economic Area ..... - 12 -
3.3 Safety Instructions ..... - 12 -
3.3.1 By source of hazard ..... - 12 -
3.3.2 By life stage ..... - 14 -
3.3.3 By location of the hazard ..... - 17 -
3.4 Operator ..... - 17 -
3.5 Personnel ..... - 18 -
3.5.1 Description of User Groups ..... - 18 -
3.5.2 Access Restrictions ..... - 19 -
3.5.3 Personal Protective Equipment (PPE) ..... - 20 -
3.6 Residual risks ..... - 20 -
4 Machine description ..... - 20 -
4.1 Technical data ..... - 20 -
4.1.1 Scope of Delivery ..... - 20 -
4.1.2 Machine Specifications ..... - 21 -
4.1.3 Environmental conditions ..... - 21 -
4.1.4 Noise emissions ..... - 21 -

4.2 Structure ..... - 23 -
4.2.1 General views ..... - 23 -
4.2.2 Views ..... - 23 -
4.3 Controls ..... - 24 -
4.3.1 Control panel on the control console ..... - 24 -
4.4 Safety Concept ..... - 25 -
4.4.1 Markings on the vacuum cleaner ..... - 25 -
4.4.2 Protective conductor, grounding, and equipotential bonding ..... - 25 -
5 Operation ..... - 26 -
5.1 Overview ..... - 26 -
5.2 Device operating states ..... - 27 -
5.2.1 Operating position ..... - 27 -
5.2.2 Precautions during operation ..... - 27 -
5.3 Connecting the suction hose ..... - 27 -
5.4 On/Off Switch (Multi-Stage Power Control) ..... - 27 -
5.5 Overload protection (multiple safeguards) ..... - 28 -
5.6 Starting and stopping the device ..... - 28 -
5.6.1 Preparation ..... - 28 -
5.6.2 Starting ..... - 28 -
5.6.3 Operation ..... - 28 -
5.6.4 Stop ..... - 29 -
5.7 Dust collection system ..... - 29 -
5.7.1 How it works ..... - 29 -
5.7.2 Preparing the dust bag ..... - 29 -
5.7.3 Operation ..... - 30 -
5.7.4 Emptying / Replacing the Dust Bag ..... - 30 -
5.7.5 Operating Instructions ..... - 31 -
5.8 Filter cleaning ..... - 31 -
5.8.1 Gate valve ..... - 31 -
5.8.2 Manual filter cleaning ..... - 32 -
5.8.3 Operating Instructions ..... - 33 -
6 Malfunctions and Troubleshooting ..... - 33 -
7 Maintenance and servicing ..... - 34 -
7.1 General Information ..... - 34 -

7.2 I Safety Instructions for Maintenance ..... - 35 -
7.3 Routine Inspection ..... - 35 -
7.4 Cleaning ..... - 36 -
7.4.1 General cleaning ..... - 36 -
7.4.2 Cleaning the filter housing ..... - 36 -
7.4.3 Filter cleaning ..... - 36 -
7.5 Overload protection ..... - 37 -
7.6 Repair ..... - 37 -
7.7 Maintenance schedule ..... - 37 -
7.8 Decommissioning ..... - 38 -
7.8.1 General Information ..... - 38 -
7.8.2 Procedure ..... - 38 -
7.9 Storage ..... - 39 -
7.9.1 Requirements ..... - 39 -
7.9.2 Storage instructions ..... - 39 -
7.10 Restart ..... - 39 -
7.10.1 Preparation ..... - 39 -
7.11 Start-up ..... - 39 -
7.11.1 Notes ..... - 40 -
7.12 Disposal ..... - 40 -
7.12.1 General Information ..... - 40 -
7.12.2 Disposal of the device ..... - 40 -
7.12.3 Disposal of Consumables ..... - 40 -
7.12.4 I Disposal of grinding dust ..... - 41 -
7.12.5 I Disposal of dust containing asbestos ..... - 41 -
7.12.6 Cleaning before disposal ..... - 42 -
8 Documentation requirements ..... - 42 -
8.1 Nameplate ..... - 42 -
9 Exploded views and parts lists ..... - 43 -
9.1 General view ..... - 43 -
9.2 Rack assembly ..... - 44 -
9.3 ..... - 45 -
9.4 Fan assembly ..... - 46 -

9.5 Wheel Axle Assembly ..... - 47 -
9.6 Control unit assembly ..... - 48 -
9.7 Suction Housing Assembly ..... - 49 -
9.8 Housing Cover Assembly ..... - 50 -
9.9 Quick-connect assembly ..... - 51 -
9.10 EC/EU Declaration of Conformity ..... - 52 -
Notes ..... - 53 -

2 Notes on Reading

2.1 Intended Users of the Operating Instructions

Chapter	Operator	Qualified personnel	Operators	Support staff
Safety	x	x	x	x
Product Description		x	x	
Shipping		x		
Installation		x		
Commissioning		x		
Operation and Use	x	x	x	x
Troubleshooting		x	x	
Maintenance	x	x		
Decommissioning		x		

→ For more information, please contact your local dealer.

2.2 Abbreviations, Synonyms, Symbols

Abbreviation/ Synonym	Meaning
PPE	Personal protective equipment
Machine	Floor Grinder HIGH TECH GRINDING 680 RC Ultra

Symbol	Meaning
→	Instruction to take action or to read a section in this document
●	List, main points
○	Bulleted list, subpoints
🖹	Invitation to read additional documents
Italics	Name of a document, a key, a button, a switch
	This text provides additional information that is .

2.3 Safety-related information

2.3.1 Overview

The safety-related information explains the hazards associated with the machine and how you can avoid them.

You will find this information primarily:

- As safety instructions and pictograms in Chapter 3, Safety
- As warnings of imminent hazards
- As pictograms and warning text in Chapter 3, Labels on the Machine and Packaging

2.3.2 Safety Chapter

This chapter contains general safety-related information on how to avoid hazards associated with the machine. The information is intended to promote your awareness of safe behavior. The goal is to provide a basis for training and instruction.

Compliance with the safety instructions protects personnel, living beings, and the environment from harm. This chapter uses the following safety symbols:

Safety symbol	Meaning
	Warning of dangerous electrical voltage

2.3.3 Warning

Meaning

This operating manual contains warning notices in several chapters. A warning notice alerts you to an imminent danger. It must be understood in the context of the situation in which the warning notice is given. The goal is to prevent accidents and damage during a specific procedure.

Signal words

Signal word	Risk level of the Hazard	Meaning
⚠ **DANGER**	High	Death or serious bodily injury may if the hazard is not avoided.
⚠ **WARNING**	indicates	Death or serious injury may occur if the hazard is not avoided.

⚠ **CAUTION**	Low	Minor or moderate injury may occur if the hazard is not avoided.
CAUTION	-	Damage with significant financial consequences to the product or other property is possible.

Presentation

Warnings are presented in the operating instructions as follows:

Variant 1:

➢ **DANGER** This warning text identifies the source of the hazard and the scope of its applicability. This warning text describes the consequences.

→ This instruction specifies the corrective action to prevent the hazard.

The warning:

- appears in the running text or at the beginning of a step-by-step instruction.
- Applies to the following text or the entire step-by-step guide

Option 2:

1. Step 1
   DANGER This warning text identifies the source of the hazard and the scope of its applicability. This warning text describes the consequences.
2. Step 2: This instruction specifies the corrective action to prevent
3. Step 3

The warning:

- precedes an action involving an imminent danger.
- applies to this action.

2.4 External documents

In addition to this operating manual, documentation from third-party suppliers must be observed.

The third-party documents contain safety-related information. This information is not repeated in this original operating manual. If hazards to the vacuum cleaner as a whole have been identified in the third-party documents, these have been taken into account in the risk assessment.

3 Safety

3.1 Intended Use

The vacuum cleaner was placed on the market by HTG Europe GmbH. The machine is intended for use in workshops and similar businesses.

The industrial vacuum cleaner is intended for:

- Extraction of dry, non-explosive dust
- Use with floor and concrete grinders
- Use in commercial and industrial settings Permitted materials:
- Concrete dust
- Rock dust
- Wood dust

The vacuum cleaner may only be operated:

- With suitable filters and genuine HTG accessories,
- In technically sound condition.

The vacuum cleaner is used:

- inside buildings
- in dry outdoor areas—when used outdoors, ensure that the vacuum cleaner is protected from moisture, wetness, and direct exposure to the elements.

The vacuum cleaner is manufactured in accordance with the state of the art and recognized safety standards.

However, improper or unintended use of the machine may result in danger to the life and limb of the user or third parties, or cause damage to the machine and other property.

Intended use includes observing these operating instructions as well as the operating instructions of the suppliers and complying with the suppliers' inspection and maintenance requirements.

The manufacturer is not liable for non-compliance or for any resulting damage. The operator bears the risk.

If malfunctions occur during operation:

- ➢ Switch off the vacuum cleaner immediately.
- ➢ Notify qualified personnel or the dealer.

Reasonably foreseeable misuse

The situations listed in this section are prohibited.
Any use other than that described in this operating manual is considered foreseeable misuse. This includes:

- Provision and use in the consumer sector.
- Storing and parking the machine under conditions that allow unauthorized persons and persons under the age of 18 to access and use the machine.
- Use:
  - in rain, lightning, dense fog, strong winds, or other adverse conditions.
  - If electronic components have become wet.
  - Near explosive or flammable materials, or steam, dust, solvents, thinners, or other flammable substances.
- Continuous operation for more than 5 hours at a time.

  The actual operating time depends on the operating conditions and may be shorter. In the event of:
  - Signs of overload,
  - Error messages
  - ➢ Immediately shut down and allow to cool.
- Operation without guards,
- mechanical or electrical bypassing of the machine or machine parts,
- the use of parts other than original parts or parts that do not meet the specifications of the replaced part,
- Modifications, alterations, and tampering,
- Use for extracting substances other than those intended.
- Failure to follow the instructions and prescribed operating, maintenance, and servicing conditions,
- Failure to comply with the regulations and provisions in the country of use, as well as with the legal provisions and accident prevention regulations governing the handling of the machine,
- Operating the machine outside the technical specifications.

3.2 Legal Provisions

3.2.1 Modifications

Modifications may create new hazards on the machine. Serious personal injury is possible.

- ➢ Do not make any modifications to the machine.

➢ Do not put machines that have been tampered with by third parties into operation.

Only original spare parts or spare parts that meet the specifications of the original spare parts may be used during maintenance work. The use of other parts may result in the manufacturer's liability being voided. Liability then passes to the converter or operator.

The manufacturer is not liable for damage caused by:

- improper use
- improper operation
- Unauthorized modifications

3.2.2 Improper use

Use is prohibited for:

- Absorbing liquids
- Absorbing glowing, hot, or burning substances
- Suction of explosive dusts
- Use in potentially explosive atmospheres (ATEX)
- Operation without a filter or dust bag
- Operation with damaged components

3.2.3 Applicable guidelines

See EC Declaration of Conformity.

3.2.4 Sale outside the European Economic Area

The manufacturer assumes no liability if the machine is sold outside the European Economic Area. The vacuum cleaner is designed, built, and documented exclusively for the European Economic Area.

If the machine is resold outside the European Economic Area, the seller is responsible for complying with all legal requirements of the respective economic area or country.

3.3 Safety Instructions

The safety instructions are sorted by their scope of application.

3.3.1 By source of hazard

Apply to the entire machine in all phases of use

Energy



Electrical energy

The machine is connected to a 230 V supply voltage. Touching live parts will result in a fatal electric shock.

- Repairs must only be performed by qualified personnel.
- Before working on the machine, unplug the power cord and secure it to prevent it from being plugged back in.
- Check the power cord and plug for damage before connecting them.
- Replace any damaged cables immediately.
- Lock the control box after finishing work and remove the key.

Substances, Materials

Dust

Respirable dust is generated during grinding. Respiratory diseases are possible.

- Wear respiratory protection:
  - Respirator with an FFP2 filter.
  - For dust containing quartz or cement, use FFP3.
- Regularly check the operator's health.

Noise

Entire machine

When operating in suction mode, the vacuum cleaner produces a high level of noise. This can cause serious hearing damage.

- Hearing protection must be worn.

Fire, Blaze, Explosion

Overheating

The vacuum cleaner is equipped with a ventilation grille. The ventilation system is designed to prevent overheating inside the control box. If the ventilation grilles are blocked or dirty, heat will build up inside the vacuum cleaner. Cable insulation may melt. Fires may occur.
Smoke inhalation and burns are possible.

- Keep the ventilation grilles open and clean.
- Replace defective ventilation components immediately.

Aging, Wear

Unnoticed wear

The vacuum cleaner is subject to aging. The components were designed to withstand the expected stresses. Nevertheless, they age and wear out. Components may fail sooner than expected

. If aging, wear, and defective parts go unnoticed, serious injuries can result.

- Follow the maintenance schedule.
- Perform regular visual inspections.

Labeling of Control and Display Elements

The control and display elements are labeled. This prevents incorrect operation. Warning labels and pictograms are affixed to the vacuum cleaner. Missing labels and pictograms can result in personal injury or damage to the machine.

- Keep control and adjustment elements, as well as labels and pictograms, clean.
- Replace damaged labels and pictograms.

Statics

Slopes

Stability and safe movement may be limited on slopes. Safety is no longer guaranteed on steep slopes. The vacuum cleaner may tip over or slide.

See also the section on Sloped Floors

3.3.2 By life stage

The following applies to the entire machine during specific life phases

Transport

Lifting and securing the vacuum cleaner

The handle, frame, and other machine parts are designed to withstand the forces encountered during operation. They cannot withstand the forces generated when lifting the machine. The vacuum cleaner:

- Do not lift by the handle, frame, or other machine parts.
- Lift it by the lifting points.
- Place it on a pallet or skid using a crane or forklift, and secure it to prevent it from falling.

PPE

For transport, the vacuum cleaner can be attached to lifting equipment. During these operations, hands may be crushed or scraped. Suspended loads may swing. Carelessness may result in the head being struck. Loads may fall or be set down inaccurately. Serious injuries to the feet and toes are possible.

- Wear a safety helmet.
- Wear work gloves.
- Wear safety shoes.
- Never stand under suspended loads.

Lifting Equipment and Transport Vehicles

The vacuum cleaner weighs 82 kg when empty. Lifting equipment that is not sufficiently rated or the use of unsuitable attachment points can cause the load to tip over or the lifting equipment to break.

- Use lifting equipment of sufficient capacity.
- Secure lifting equipment to the attachment points and lift.

Transport operations may only be performed by qualified personnel in accordance with the safety instructions

- Follow the regulations for securing the load during transport.
- Provide an escort for safety purposes during transport on open factory grounds.

Load-bearing equipment and lifting slings must comply with the provisions of the accident prevention regulations.

- Use only tested and approved lifting equipment:
  - Shackles in accordance with DIN 82101
  - Lifting chains in accordance with DIN EN 818-2, Grade 8
  - Lifting ropes in accordance with DIN EN 13414-1
  - Textile lifting slings (round slings) in accordance with DIN EN 1492

Loading transport vehicles

Undersized transport vehicles can be overloaded by the load. Machine parts may protrude beyond the outer dimensions of the transport vehicle. Operational and roadworthiness may be compromised. These issues may not be immediately apparent and may only arise during transport. Loads may shift due to vehicle movement.

- Select a transport vehicle of sufficient size based on the weight and dimensions.
- Secure loads on the transport vehicle using suitable means.
- Protect the machine from moisture.

Assembly, Disassembly

Storing tools and components

Tools can be stored outside of tool storage areas. Components are ready for installation. People may trip and fall.

- Provide sufficient assembly and storage space.
- Do not store tools and components in traffic areas or in locations with poor visibility.
- Clean up tools after work is finished.

Commissioning

Before first use

- Always use the vacuum cleaner in accordance with the accompanying operating instructions.

- Carefully read the operating instructions, including the safety information, before first use.
  This knowledge will help you recognize dangerous situations and protect yourself and others.
- Do not operate the vacuum cleaner until you have read and understood the contents of the operating instructions.
- Train qualified personnel.
- Use qualified professionals.
- Only operate the vacuum cleaner if it has not been tampered with and is undamaged.
- When using the vacuum cleaner, comply with local laws and regulations.
- Ensure that the operator has taken safety precautions and that hazards can be avoided during operation.

Operation, Use

Operating the vacuum cleaner may pose a hazard to bystanders, e.g., due to noise and dust

- Direct people out of the danger zone within a radius of at least 2 m.

Maintenance

Replacing components

The vacuum cleaner's components are designed to work together in terms of their specifications and construction. Replacing them with unsuitable components can lead to malfunctions and pose a risk to people working on the vacuum cleaner.

- Use only genuine replacement parts or parts that meet the specifications of the genuine replacement part.

Storage

Access by Unauthorized Persons

The vacuum cleaner is intended for users with technical expertise and who have received training. See chapter User Groups

- Store the vacuum cleaner so that unauthorized user groups do not have access to it, e.g., locked in a room.

Disposal

Prevent environmental damage

The vacuum cleaner contains components or substances that pose a risk to the environment if disposed of improperly.

- To prevent environmental damage, proceed as follows. Materials and components:
  - Sort,

-  do not throw parts in the trash,
- dispose of them in accordance with legal regulations,
- have them collected and recycled by a specialized company. Follow the safety data sheets.

3.3.3 By location of the hazard

Applicable to specific machine parts throughout their entire service life

Safety devices

Regular inspection

The protective devices are designed so that, when used as intended, the risk of injury is reduced to a residual risk. If protective devices are not functional, serious injuries may result.

- ➢ Do not tamper with or modify safety devices.
- ➢ Always operate the vacuum cleaner with fully functional safety devices.
- ➢ After repair work, reinstall the safety devices and check their function.

Entire machine

Vibrations and Noise

The vacuum cleaner has been designed to the best of current technology to minimize vibration intensity and noise levels as much as possible. In the event of abnormal:

- strong vibrations,
- loud noises

➢ , immediately stop using the vacuum cleaner and prevent its reuse.

➢ Notify the authorized dealer.
The vacuum cleaner may only be inspected and repaired by service personnel authorized by the dealer.

3.4 Operator

The operator:
...fulfills occupational safety obligations regarding the operation of the vacuum cleaner.
• operates the vacuum cleaner safely and without tampering throughout its entire service life, • ensures that staff read and understand the operating instructions, • trains staff before they begin work, • provides the operating instructions in paper form, • keeps the operating instructions and third-party documents in legible condition. • Provides fire extinguishers and first-aid kits

...handles human resources tasks.
• assigns people to a user group, • provides training to user groups.
...instructs users on how to respond to accidents and operational disruptions. The content of the instruction includes, for example:
• the locations of first-aid stations, • the location and layout of escape routes, • how to respond in emergencies and regular practice of these procedures. ➢ Seek professional medical treatment immediately after administering first aid.

3.5 Personnel

3.5.1 Description of user groups

Specialized personnel
...are specialists who, due to their vocational training, professional experience, and recent relevant professional activity or personal characteristics, can perform specialized work on the vacuum cleaner. They are commissioned and instructed by the operator.
• has successfully completed and holds a recognized specialized training, possesses knowledge and experience in operating the vacuum cleaner, • can assess the task and carry it out independently, • has knowledge of how to apply the relevant standards or the ability to acquire such knowledge, • is familiar with the hazards that may arise in their field of expertise, as well as with methods for preventing and eliminating them.
...is instructed by the respective dealer prior to commissioning. The following qualified personnel are required for the operation of the vacuum cleaner:
• for work on the electrical equipment for setup and testing • for maintenance and repair for troubleshooting • for transport, assembly, and disassembly work
Operators
...are persons who work with the vacuum cleaner.
• can read, • understand the relevant symbols and instructions, and, after receiving instruction and training, can perform the tasks independently and in accordance with the guidelines, • recognize hazards after receiving instruction and can respond in accordance with the guidelines.

Support staff
...are persons who perform tasks related to the vacuum cleaner that do not involve operating it. This includes, for example, cleaning. Support staff are not permitted to operate the vacuum cleaner.
• can understand instructions, • can implement instructions while performing their duties, • recognizes hazards after receiving instruction and can respond in accordance with guidelines.
Trainees
...are individuals undergoing vocational training. They may operate the vacuum cleaner under the supervision of qualified personnel or perform tasks within their field of expertise.
• can understand instructions, • can follow instructions while performing their duties, • recognize hazards after receiving instruction and can respond in accordance with guidelines.
Contractor personnel
...are external employees who, under the following circumstances, possess the qualifications of the preceding employee groups:
• Before work begins, training and safety briefings must be conducted by qualified personnel and documented in writing. • The work of third-party personnel must be coordinated with internal employees to prevent mutual hazards. • Before work begins, a direct contact person—an internal employee—must be designated who is informed about the work procedures and work locations.

3.5.2 Access Restrictions

User Groups

User groups may only be granted access to the vacuum cleaner in accordance with their qualifications.

Age

Users of the vacuum cleaner must be of legal age. Trainees under the age of 18 may only operate the machine in the presence of an instructor for training purposes.

Health

The vacuum cleaner must not be operated by persons who are under the influence of substances that impair reaction time, are tired, or are unable to operate it for health reasons.

Users must be able to recognize the visual hazard signals.

➢ Keep unauthorized persons away from the machine.

3.5.3 Personal Protective Equipment (PPE)

The user's personal protective equipment includes:

PPE	When?	Pictogram
Respiratory protection	• During operation: o Respirator with FFP2 filter o for dust containing quartz or cement FFP3	
Hearing protection	• During operation: • e.g., ear muffs with an SNR of 25 dB	

3.6 Residual risks

Despite all protective measures, the following risks remain:

- Dust exposure
- Noise exposure
- Risk of tipping over
- residual voltage

4 Machine description

The HTG IVC-V3 ULTRA vacuum cleaner is an industrial vacuum cleaner featuring:

- multi-stage suction system
- Industrial HEPA filter
- Dust bag system (Longopac)
- Suction connection for grinders
- manual filter cleaning

4.1 Technical Specifications

➢ Operate the machine within the limits of the technical specifications.

4.1.1 Scope of delivery

The scope of delivery includes:

- A vacuum cleaner with a power cord,

- One dust bag – HTG Longopac
- Cable ties for sealing the Longopacs

4.1.2 Machine specifications

Model	Value
Power	3.3 kW
Mains voltage	230 V / 1-phase
Rated current	13.5 A
Frequency	50 / 60 Hz
Electrical connection	230 V
Suction power	22 kPa
Maximum air flow	537 m^3/h
Filter system	HEPA
Filter cleaning	Manual
Suction connection	Kamlock Easy Connect E200 (50 mm)
Alternative suction connection	Kamlock Easy Connect 300 (80 mm)
Dimensions W x L x H	59 cm x 110 cm x 130 cm
Total weight, empty	82 kg

4.1.3 Environmental conditions

Designation	Value
Operating temperature	-10 to 40°C
Operating and storage temperature	5°C to 60°C
Humidity	max. 90% No condensation

4.1.4 Noise emission

The vacuum cleaner produces significant noise emissions during operation. These depend on the selected suction level

Measured values

Measured variable	Designation	Value	Measurement uncertainty	Reference standard

A-weighted emission sound pressure level at the workplace	LpA	85 dB(A)	+ 2 dB	EN ISO 11201
A-weighted sound power level	LWA	99 dB(A)	:!: 2 dB	EN ISO 3744
Peak sound pressure level	LpC,peak	130 dB(C)	+ 2 dB	EN ISO 11201

The values were determined in accordance with the following recognized method:

- EN ISO 11201 - Acoustics - Noise emission from machinery and equipment - Determination of emission sound pressure levels at the workplace and at other specified locations in a substantially free sound field above a reflecting plane with negligible ambient corrections
- EN ISO 3744 - Acoustics - Determination of sound power and sound energy levels of noise sources from sound pressure measurements - Envelope method of accuracy class 2 for a substantially free sound field over a reflecting plane

The determined noise values meet the requirements of the Machinery Directive 2006/42/EC, Annex I, Section 1.7.4.2 (u). They do not constitute a guarantee but serve to compare different machine models under standardized conditions.

The values apply to operation in accordance with the intended use. The actual noise level may vary.

➢ Take appropriate noise protection measures.

Noise control measures

The operator is obligated to regularly monitor noise levels at the workplace and, if necessary, implement organizational protective measures

Directive 2003/10/EC.

➢ Wear hearing protection at 80 dB(A) or higher.

➢ Remove persons without hearing protection from the noisy area

Occupational safety

If the daily noise exposure level exceeds 85 dB(A), the employer must provide personal protective equipment (PPE) for hearing protection and instruct employees on its use.

➢ Wear hearing protection throughout the entire grinding operation

e.g., earmuffs with an SNR * of 25 dB.

4.2 Structure

4.2.1 Overall views

4.2.2 Views

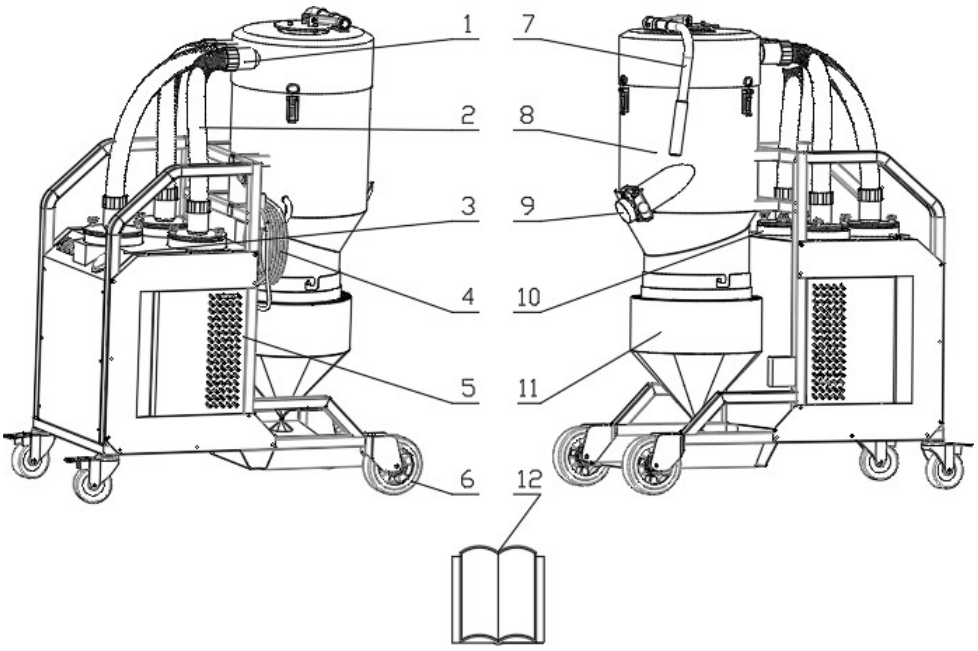

Fig. 1 Overall view

Pos.	Designation	Item	Description
1	Suction connection ø50	2	Suction hoses
3	Control panel	4	Power cord
5	Ventilation grille	6	Wheels
7	Manual cleaning flap	8	Vacuum housing
9	Vacuum shut-off valve	10	Filter housing
11	Dust bag - Longopac	12	Operating Instructions

4.3 Controls

4.3.1 Control panel on the control console



Fig. 2 Controls

1. Toggle switch (on/off switch)

The toggle switch is used to turn the device on and off.

- Switch position "I" (up): Device on
- Switch position "0" (down): Device off

2. Overload protection with reset function

The device is equipped with overload protection that automatically triggers and shuts down the device if the permissible current is exceeded.

Procedure after tripping:

- Turn off the device and unplug it
- Eliminate the cause of the overload
- Press the reset button on the circuit breaker
- Restart the device

3. Vacuum gauge

The vacuum gauge is used to monitor the vacuum generated in the system.

It allows you to:

- Monitoring of suction power
- Detection of blockages or filter clogging

The display is based on the measurement of the static pressure difference in the airflow system.

4.4 Safety Concept

4.4.1 Labels on the vacuum cleaner

Safety-related information is displayed on the vacuum cleaner in the form of pictograms and/or labels. They indicate risks that:

- occur frequently and/or
- have serious consequences.

The following labels are affixed to the machine:

Meaning	Location	Label
Warning Warning Dangerous electrical voltage		
Read the operating instructions before using the machine	On the rack	
Wear hearing protection	On the rack	
Wear safety goggles	On the rack	

4.4. 2 protective conductors, grounding, and equipotential bonding

At he following are installed on the machine:

Designation	Function	Pictogram
Protective conductor	Protects people from electric shock.	
Equipotential bonding	Establishing electrical connections between conductive parts to achieve potential equality.	

5 Operation

5.1 Overview

The following sections describe:

- the device's operating states
- the basic operating functions
- Connection to sanders
- safe operation of the vacuum cleaner

Important Safety Instructions

WARNING – Danger due to improper operation

- The device may only be operated by trained and qualified personnel
- The operating instructions must be read in full and followed before commissioning
- Maintenance and repair work must only be performed by authorized qualified personnel

WARNING – Health hazard due to dust

- Harmful dust may be generated during operation
- Appropriate personal protective equipment must be worn

Required PPE:

- Respiratory protection (min. FFP2 / FFP3)
- Safety goggles / face shield
- Protective gloves
- Safety shoes
- Appropriate work clothing

CAUTION – Mechanical hazard

- Operate the device only on a level and stable surface
- There is a risk of crushing or pinching when moving the machine
- Secure the rollers before operation (apply the brakes)

NOTE – Electrical Connection

- Check the required cable cross-section before using extension cords
- For details, see the “Technical Data” section

5.2 Operating positions of the device

5.2.1 Operating position

To prepare the device for operation, proceed as follows:

- Position the device on a level surface
- Apply the wheel brakes
- Connect the suction hose
- Connect the power supply

Operation is controlled via the controls on the control panel.

5.2.2 Precautions during operation

- Improper handling may cause the device to tip over
- Dust exposure must be minimized by taking appropriate protective measures
- Operate the device only in a dry environment
- Keep the work area free of obstacles

5.3 Connecting the suction hose

The vacuum cleaner is equipped with a connection for suction hoses with a diameter of **50 mm**.

Procedure:

1. Attach the suction hose to the vacuum cleaner’s connection port
2. Connect the hose to the grinder
3. Check that the connection is secure and airtight

5.4 On/Off switch (multi-stage power control)

The unit is equipped with three separate toggle switches that allow the suction power to be adjusted in stages.
Each toggle switch activates its own fan (motor).

Switching logic:

- 1 switch set to “I” → **Suction level 1** (one fan active)
- 2 switches set to "I" → **Suction level 2** (two fans active)
- 3 switches set to "I" → **Suction level 3** (all fans active)

- Adding more fans increases the suction power accordingly.

NOTE:
The suction power should be adjusted according to the requirements of the specific application to minimize energy consumption and wear.

5.5 Overload protection (multiple safeguards)

The unit is equipped with **three separate overload protection devices**, each assigned to a fan (motor).
If a single motor is overloaded:

- only the affected motor is shut down
- the remaining motors remain operational

Restart after tripping

1. Turn off the unit
2. Unplug the power cord
3. Determine and eliminate the cause of the overload
   (e.g., clogging, filter loading, voltage problem)
4. Press the reset button on the affected overload protection
5. Turn the device back on ■

Safety Note WARNING – Overload

- Frequent tripping of the overload protection indicates a malfunction
- In this case, take the device out of service and have it inspected by qualified personnel

5.6 Starting and Stopping the Device

5.6.1 Preparation

- Position the device at the work site
- Connect the suction hose
- Connect the power supply
- Check the cable for damage

5.6.2 Start

1. Plug in the power cord
2. Set the toggle switch to position “I”

The device has several drive units (motors) that can be switched on individually.

- Connecting additional motors increases the suction power.

5.6.3 Operation

- Adjust suction power according to the application
- Monitor the airflow and vacuum pressure

- Check the dust bag fill level regularly

5.6.4 Stop

1. Set the toggle switch to the "0" position
2. Allow the device to come to a complete stop
3. Unplug the power cord if necessary

5.7 Dust collection system

The industrial vacuum cleaner is equipped with a closed dust collection system consisting of the following components:

- Dust bag holder
- Continuous dust bag system (e.g., Longopac or comparable)

The dust collection system is located below the filter cartridge housing and is designed for the safe collection and disposal of the extracted material.

5.7.1 Functionality

After filtration, the separated dust is collected in the dust bag.
The bag system enables low-dust disposal without direct contact with the collected material.

5.7.2 Preparing the dust bag

Before use, the dust bag must be properly installed and prepared:

1. Insert the dust bag into the dust bag holder
2. Guide the bag downward out of the holder
3. Seal the bottom end of the bag dust-tight using a suitable cable tie or clip
4. Ensure that the bag is correctly positioned and sealed

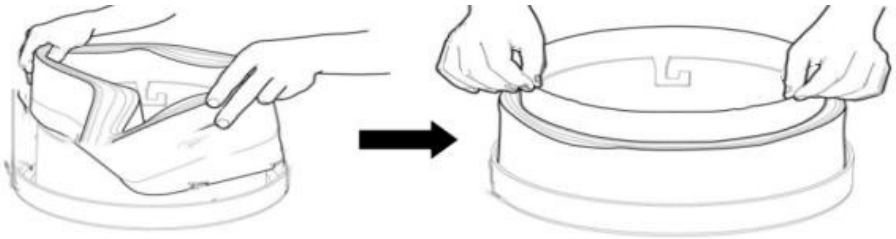

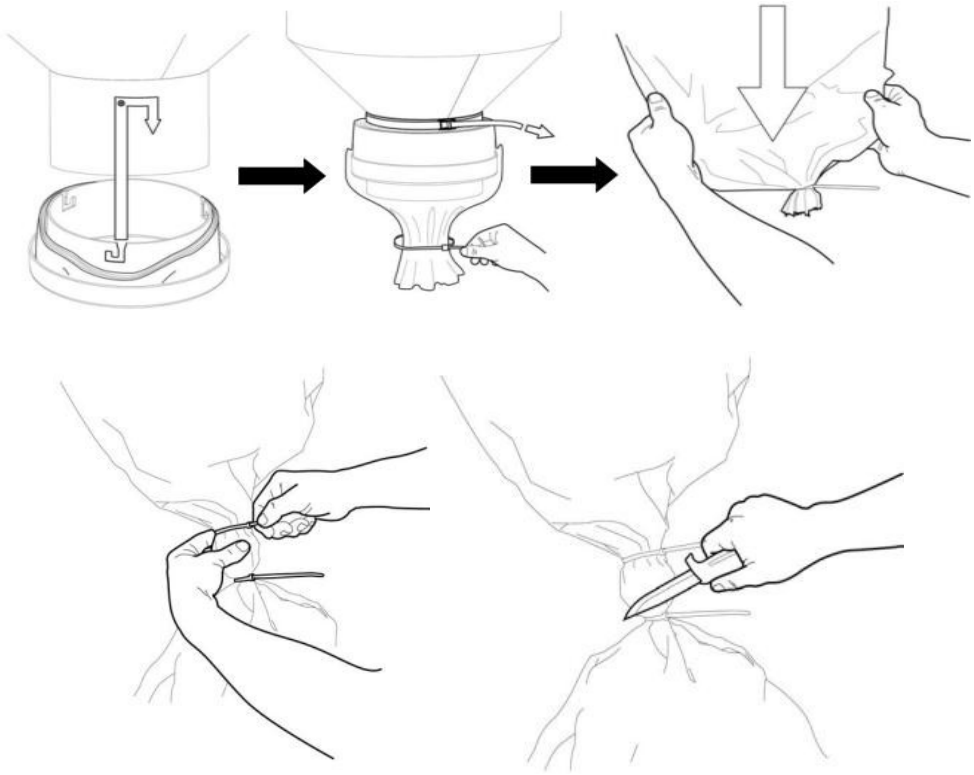

■ **Safety Note**

WARNING – Health hazard due to dust

- Only change the dust bag when the device is turned off
- Avoid contact with dust
- Wear appropriate personal protective equipment (respirator, gloves)

5.7.3 Operation

During operation:

- Dust is continuously collected in the dust bag
- The fill level must be checked regularly
- Ensure that material can be collected without obstruction

5.7.4 Emptying / Replacing the Dust Bag

Once the dust bag is sufficiently full, it must be replaced:

1. Turn off the device and unplug it
2. Close the dust bag above the filled area with a cable tie

3. Cut the bag below the sealed section
4. Dispose of the filled bag in accordance with applicable regulations
5. Prepare the new section of the bag (seal the lower end)

5.7.5 Operating Instructions

- Do not overfill the dust bag
- Replace damaged or leaky bags immediately
- Use only suitable and compatible dust bags

NOTE

Regular inspection and timely replacement of the dust bag ensure:

- consistent suction power
- reliable dust collection
- extended filter life

5.8 Filter cleaning

To maintain suction power, regular cleaning of the filter cartridge is required. The device features a manual cleaning system that works in conjunction with a slide valve.

Safety Instructions

WARNING – Health hazard due to dust

- Dust particles may be released during filter cleaning
- Wear appropriate respiratory protection (min. FFP2 / FFP3)

CAUTION – Malfunction

- Clean the filter only while the unit is running, unless otherwise specified
- Improper operation can lead to a drop in performance or damage

5.8.1 Gate valve

The slide valve is located in front of the suction connection.

- **Function**

The slide valve controls the air flow in the system:

- **Open (normal operation):**
  Air flows through the cyclone separator and then through the filter cartridge (multi-stage filtration)
- **Closed (cleaning mode):** The airflow from the cyclone separator is interrupted
  → Increased negative pressure (nearly vacuum conditions) builds up in the filter housing
  → This enables effective cleaning of the filter cartridge

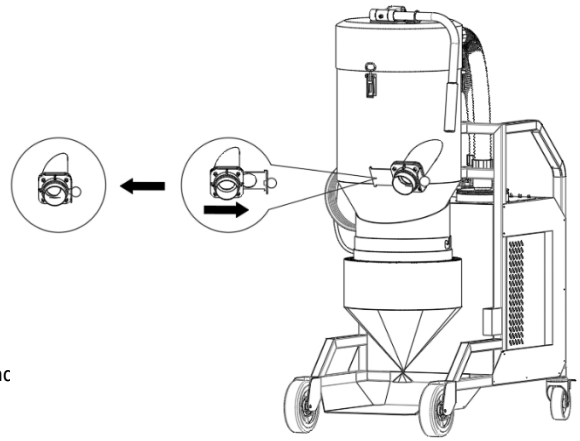

5.8.2 Manual filter cleaning

Filter cleaning is performed using a combination of a slide valve anc

Preparation

- Make sure the device is turned on
- Check the system for leaks (seals, connections)

Procedure

1. **Close the gate valve**
   → Move the gate valve fully to its end position
2. **Wait for the specified time**
   → Wait approx. 3–5 seconds until a vacuum has built up in the filter housing
3. **Activate the cleaning mechanism**
   → Quickly lift the actuator handle
   → Hold open for approx. 1–2 seconds
   → then release
4. **Repeat the process**
   → Perform steps 2 and 3 a total of 4–5 times

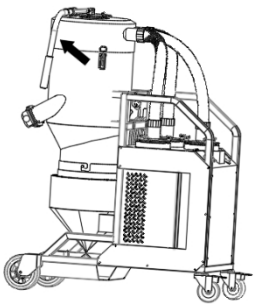

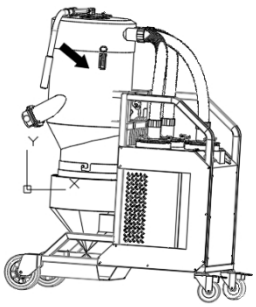

5. **Open the slide valve**
   → Return the valve to the operating position

Result

The pressure pulses dislodge dust deposits from the filter surface and carry them into the dust bag.

5.8.3 Operating Instructions

- The frequency of filter cleaning depends on the dust load
- Cleaning should be performed if suction power decreases
- If the filters are heavily soiled, additional manual cleaning or replacement may be necessary

■ **Safety Note WARNING – Loss of**

Function

- Be sure to return the slide valve to the operating position after cleaning
- Operation with the slide valve closed is not permitted

6 Malfunctions and Troubleshooting

This chapter describes typical malfunctions, their possible causes, and corrective actions.

NOTE:
If the problem cannot be resolved using the measures described above, take the device out of service and contact the manufacturer or an authorized service provider.

■ Safety Note

WARNING – Danger from electric current and moving parts

Before performing any inspection or maintenance work, the device must be turned off and disconnected from the power supply.

Work on electrical components may only be performed by qualified personnel.

Malfunction	Possible cause	Remedy

Device does not start	No power supply	Check the power connection; connect the power cord correctly
	Overload protection has tripped	Eliminate the cause of the overload, reset the circuit breaker
	Power cord is damaged	Take the device out of service; have the cable replaced by qualified personnel
	Fault in the control circuit	Contact service or have it checked by a qualified electrician
Device stops during operation	Airflow blocked	Clear blockages, clean components
	Overload protection activated	Determine the cause and perform a reset
Humming noise when turning on	Faulty power supply	Turn off the device and have the power supply checked
	Dirt in the motor	Have the device cleaned by qualified personnel
	Motor damage	Contact service
Reduced suction power	Leak in the system	Check seals and connections
	Filter or separator clogged	Clean the filter and cyclone separator
	Suction hose clogged	Clean or replace the hose
Dust escaping from the unit	Filter not installed correctly	Insert and secure the filter correctly
	Filter has shifted or come loose	Check the filter position and install it correctly
	Filter is damaged	Replace the filter

7 Maintenance and servicing

7.1 General

Regular maintenance and inspection of the device is required to:

- to ensure operational safety

- to maintain suction performance
- to extend the service life of the unit

Maintenance work may only be performed by trained personnel.

7.2 ⚠ Safety instructions for maintenance

WARNING – Danger from electric current and moving parts

- Before performing any maintenance or cleaning work, the device must be turned off and disconnected from the power supply
- Work on electrical components must only be performed by qualified personnel
- Wear appropriate personal protective equipment during maintenance

Required PPE:

- Safety shoes
- Protective gloves
- Safety goggles
- Respiratory protection (for dust-contaminated components)

7.3 Routine inspection

The following inspections must be performed regularly:

Visual inspection

- Check the device for external damage
- Check hoses, connections, and accessories for cracks, leaks, and wear
- Replace damaged components immediately

Air duct system

- Ensure that all air passages are free of obstructions
- Check the suction hose for blockages
- Clean or replace if necessary

Seals and connections

- Check seals and sealing surfaces for damage and wear
- Ensure the system is airtight
- Replace defective seals

Filter and separation system

- Check that the filter housing is properly seated
- Check the sealing surface of the filter cover

Inspect the suction housing

- Open the cover
- Visually inspect the inner surface
- Dull surface = normal
- Shiny deposits = cleaning required

Internal components

- Check internal hoses for leaks and condition
- Check the fan (turbine) for dirt
- Clean if necessary

NOTE:
Unusual noises during operation may indicate wear or blockages.

Fastening elements

- Check screws and connections regularly to ensure they are tight
- Tighten at least every 6 months

7.4 Cleaning

7.4.1 General cleaning

- Regularly remove dust deposits from the unit
- Check the interior of the filter housing for dirt
- Clear any blockages in the air system

7.4.2 Cleaning the filter housing

- Remove the filter housing cover
- Disconnect the suction hose
- Visually inspect the interior
- Clean if necessary

7.4.3 Filter cleaning

Manual filter cleaning

Filter cleaning is performed via the integrated cleaning system:

- Actuate the cleaning mechanism several times
- Repeat the cleaning process at intervals
- Adjust according to dust exposure **Remove**

and thoroughly clean WARNING – Dust

exposure

- Wear respiratory protection
- Perform work only when the device is turned off Procedure:
  1. Turn off the device and unplug it
  2. Move the device to the maintenance/transport position
  3. Release the latches on the filter cover
  4. Remove the filter cartridge by turning it counterclockwise
  5. Clean or replace the filter

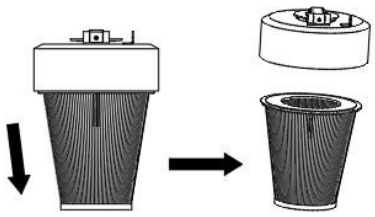

7.5 Overload protection

The device is equipped with thermal overload protection. If the permissible current is exceeded:

- the device will automatically shut down

Restart:

1. Eliminate the cause of the overload
2. Disconnect the device from the power supply
3. Press the reset button
4. Restart the device

7.6 Repair

- Repairs may only be performed by qualified technical personnel
- Only use original replacement parts In case of malfunctions or damage:

– Contact the manufacturer or an authorized service partner

7.7 Maintenance schedule

Interval	Maintenance tasks
Daily	Visual inspection of the unit Check dust bag Check airflow Perform manual filter cleaning
Weekly	Check hoses and connections

	Check the condition of the filter Check seals
Monthly	Clean the suction housing Clean the interior Check fan for dirt
Every 6 months	Tighten screws and fasteners Perform a complete system check
If necessary	Replace filters Replace damaged parts

7.8 Decommissioning

7.8.1 General

Decommissioning must be performed if the device:

- is not used for an extended period
- is being transported
- is being serviced or cleaned
- **Safety Instructions**

WARNING – Risk of electric shock

- Turn off the device and disconnect it from the power supply
- Unplug the power cord and secure it to prevent it from being plugged back in

WARNING – Health hazard due to dust

- Wear appropriate respiratory protection when emptying and cleaning

7.8.2 Procedure

1. Turn off the device (toggle switch to “0”)
2. Unplug the power cord
3. Seal the dust bag properly and dispose of it
4. Clean the filter
5. Clean the unit (interior and exterior surfaces)
6. Check the unit for damage

7.6 Storage

7.9.1 Requirements

The device must be stored under the following conditions:

- Dry, low-dust environment
- Ambient temperature: +5 °C to +40 °C
- Protect from moisture and direct sunlight
- Store in a frost-free environment

7.9.2 Storage instructions

- Place the device on a level surface
- Apply the wheel brakes
- Wind the power cord neatly and secure it
- Protect the device from mechanical damage

NOTE:
Improper storage can lead to corrosion, electrical damage, or malfunctions.

7.10 Restarting

7.10.1 Preparation

Before restarting the system after a prolonged period of inactivity, the following checks must be performed:

- Visual inspection for damage
- Inspection of all electrical components
- Inspection of cables and connectors
- Inspection of filters and seals
- Inspection of the dust bag system

7.11 Commissioning

1. Connect the device to a suitable power supply
2. Ensure that all components are correctly installed
3. Turn on the device
4. Perform a functional test:

- Check suction power
- Check the airflow
- Listen for unusual noises

7.11.1 Notes

WARNING – Malfunction

- Do not operate the unit if damage is detected
- If any abnormalities are detected, take the device out of service and contact service

7.12 Disposal

7.12.1 General

At the end of its service life, the device and all associated components must be disposed of in accordance with applicable legal regulations.

NOTE:
Disposal must be carried out in an environmentally sound manner and in accordance with national and local regulations.

7.12.2 Disposal of the device

The industrial vacuum cleaner contains:

- electrical and electronic components
- metals
- plastics

These must **not be disposed of with household waste**.

- The device must be disposed of in accordance with the **WEEE Directive (2012/19/EU)**.

Procedure:

- Return the device to an authorized collection point
- or have it disposed of by a specialized disposal company

7.12.3 Disposal of consumables

The following components must be disposed of regularly:

- Dust bags
- Filter elements
- Seals (when replaced)

Disposal should be carried out according to the type of material collected.

7.12.4 ⚠ Disposal of grinding dust

WARNING – Health hazard due to fine dust

Dust generated during grinding may contain substances hazardous to health, e.g.:

- Quartz dust (risk of silicosis)
- Wood dust
- Coating residues

Precautions:

- Do not open or empty the dust bag
- Seal the dust bag tightly
- Wear appropriate personal protective equipment:
  - Respiratory protection (FFP2 or FFP3)
  - Protective gloves

Disposal:

- in accordance with local regulations for construction site or industrial dust
- through approved disposal facilities

7.12.5 ⚠ Disposal of dust containing asbestos

DANGER – Life-threatening hazard due to asbestos

Dusts containing asbestos are highly dangerous and carcinogenic.

- Handling is subject to strict legal regulations.

Principle:

- The device is **not intended for the collection of asbestos-containing materials** unless a special approval has been granted.
- **If asbestos-containing dust has nevertheless been collected: Immediate**

measures:

- Do not continue to operate the device
- Label and isolate the device
- Do not attempt to clean the device yourself

Disposal requirements:

- Disposal exclusively by **certified specialized companies**
- Comply with national regulations (e.g., TRGS 519 in Germany)

- Use of suitable, labeled disposal containers

Personal protective equipment:

- Respiratory protection (at least FFP3 or higher)
- Protective suit (disposable)
- Gloves

7.12.6 Cleaning before disposal

Before disposing of the device:

- Completely empty the device
- Remove dust residues
- Perform decontamination if necessary (for hazardous substances)

8 Documentation systems

8.1 Nameplate



The nameplate lists the minimum specifications of the machine. The minimum specifications have been supplemented with connection data.

6 Exploded views and parts lists

6.1 General view

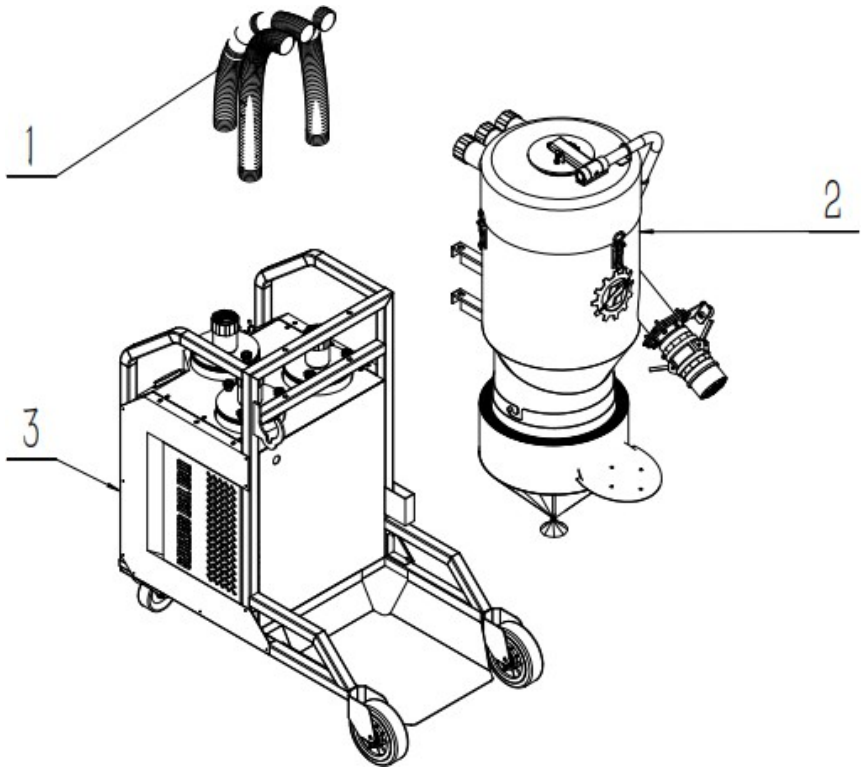

Pos	Item No.	Description	Qty
1	3.23.113.049	Suction line	3
2	2.44.010.014	Complete suction housing	1
3	2.44.010.018	Suction unit	1

6.2 Rack assembly

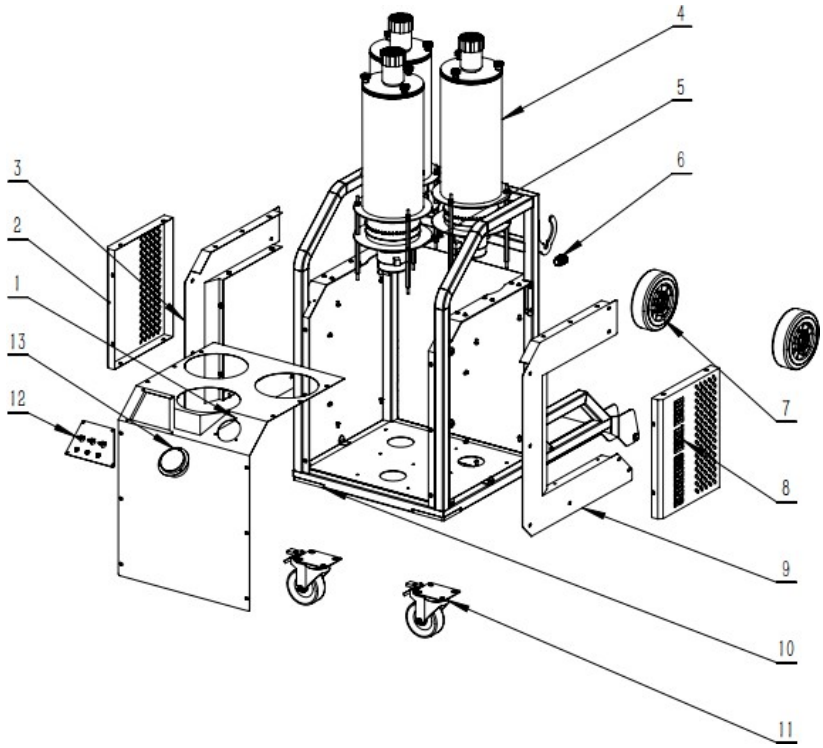

Pos	Item No.	Description	Qty
1	4.12.010.063	Outer shell	1
2	4.12.010.062	Left panel	1
3	4.12.010.061	Left trim	1
4	2.44.010.017	Fan assembly	2
5	2.44.010.016	Fan assembly	1
6	5.11.110.001	Cable gland	1
7	2.44.010.003	Axle assembly	2
8	4.12.010.074	Right side panel	1
9	4.12.010.060	Right side panel	1

10	4.12.010.068	Grestell frame	1
11	3.22.111.025	Wheels	2
12	2.44.010.015	Control panel	1
13	3.22.201.051	Vacuum gauge	1

6.3

6.4 Fan assembly

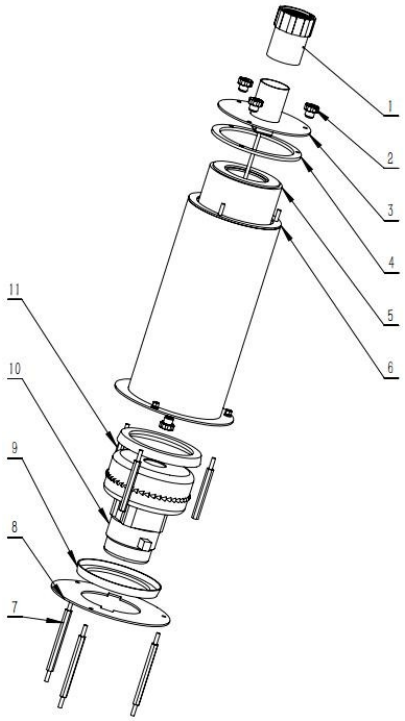

Pos	Item No.	Description	Qty
1	3.22.126.004	Vacuum hose connection	1
2	5.11.104.004	Star-head nut	4
3	4.12.010.066	Filter element cover	1
4	4.12.010.047	Rubber plate	1
5	3.22.162.002	Filter element	1
6	4.12.010.067	Filter housing	1
7	4.12.010.041	Threaded rod	3
8	4.12.010.065	Fan bracket	1
9	4.12.002.067	Rubber ring for fan	2
10	3.11.112.005	Fan motor	1
11	4.12.010.042	Threaded rod	3

6.5 Wheel Axle Assembly

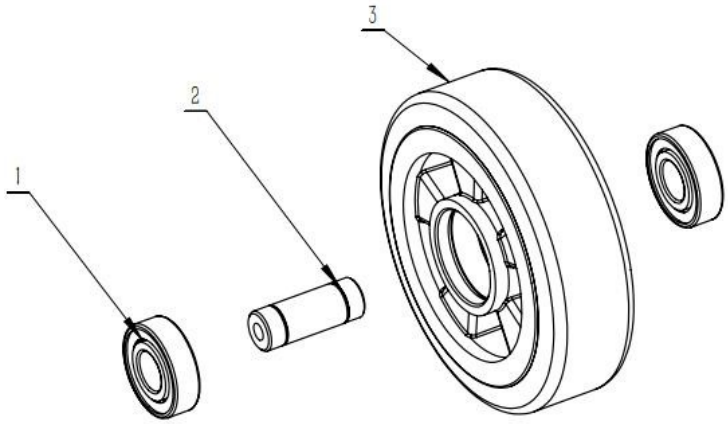

Pos	Item No.	Description	Qty
1	3.22.112.081	Stock unit	2
2	4.12.003.085	Wheel axle	1
3	3.22.111.019	Wheel	1

6.6 Control Unit Assembly

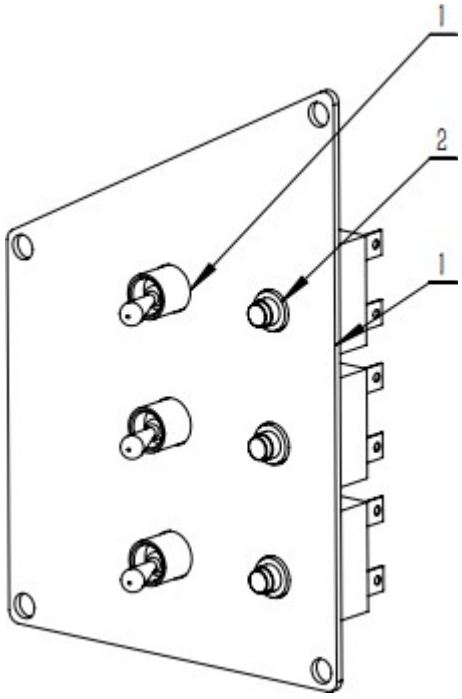

Pos	Item No.	Description	Qty
1	4.12.010.059	Control panel	1
2	3.21.122.062	Thermal protection	3
3	3.21.114.128	Toggle switch	3

6.7 Suction housing assembly

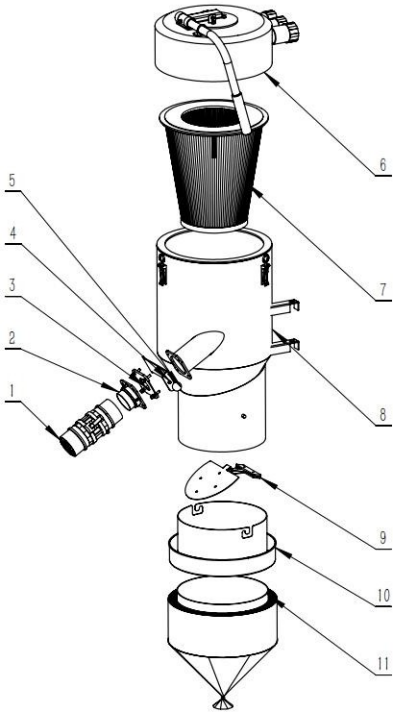

Pos	Item No.	Description	Qty
1	2.41.018.011	Quick-connect coupling	1
2	4.12.003.087	Vacuum connection	1
3	4.12.003.089	Slide rail	1
4	4.12.003.088	Slider	1
5	3.22.127.003	Ball handle	1
6	2.44.010.013	Housing Cover	1
7	3.22.162.015	Filter	1
8	4.12.010.058	Filter housing	1
9	4.12.008.043	Swivel flap	1
10	4.12.001.086	Holder for dust bag / Longopac	1
11	A02.01.0064	Dust bag / Longopac	1

6.8 Housing and Lid Assembly

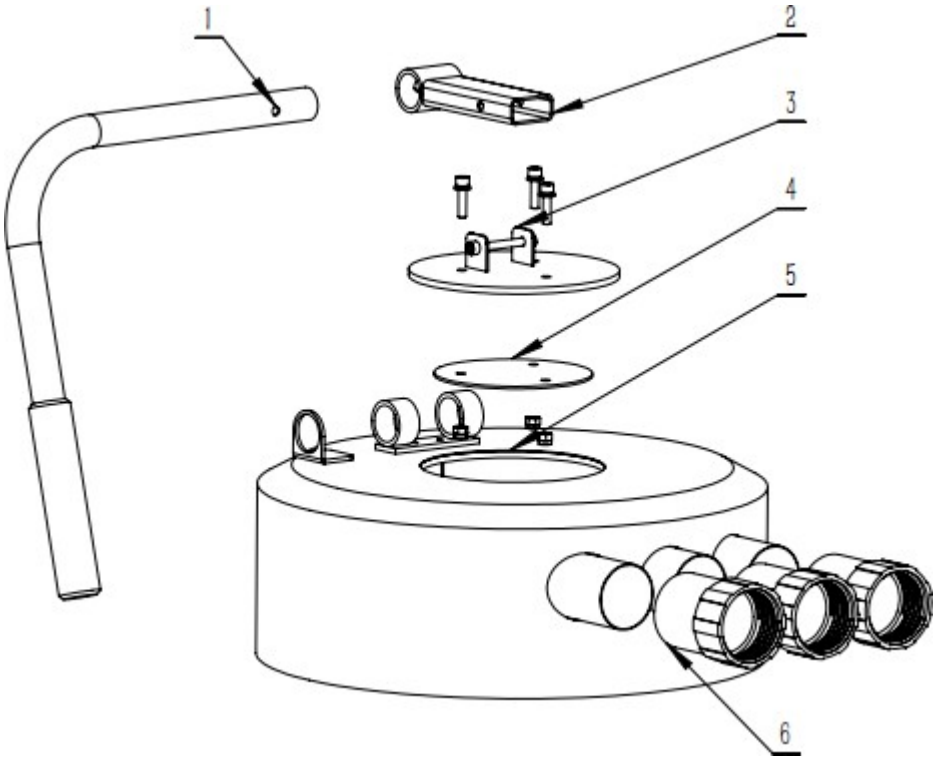

Pos	Item No.	Description	pcs
1	4.12.010.057	Handle cleaning	1
2	4.12.003.076	Handle bracket	1
3	4.12.003.094	Joint for handle	1
4	4.12.003.081	Rubber plate	1
5	4.12.010.073	Housing cover	1
6	3.22.126.004	Hose connection	3

6.6 Quick-connect assembly

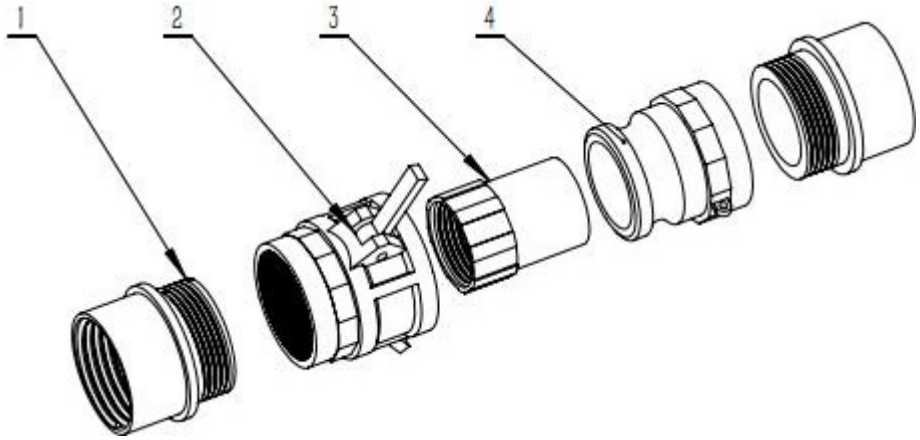

Pos	Item No.	Description	Qty
1	3.22.126.015	Connection 1	1
2	3.22.126.017	Port 2	1
3	3.22.126.004	Port 3	1
4	3.22.126.016	Port 4	1

EG-/EU- Konformitätserklärung

nach der Maschinenrichtlinie
2006/42/EG Anhang IIA

Hiermit erklären wir, dass die nachfolgend bezeichnete Maschine aufgrund ihrer Konzipierung und Bauform sowie in der von uns in Verkehr gebrachten Ausführung den einschlägigen grundlegenden Sicherheits- und Gesundheitsanforderungen der EG-/EU-Richtlinien entspricht.

We hereby declare that the machine described below complies with the relevant basic safety and health requirements of the EC/EU directives in terms of its design and construction, as well as in the version marketed by us.

Beschreibung *description:*	Staubsauger *vacuum cleaner*
Marke *brand:*	HTG Europe
Typ *type:*	IVC-V3 Ultra
Identifizierung *Identification:*	Seriennummern ab 2025 *Serial numbers starting in 2025*

entspricht folgenden EG-Richtlinien: *Complies with the following EG directives:*	**Maschinenrichtlinie 2006/42/EG** *Machinery Directive 2006/42/EG* **EMV-Richtlinie 2014/30/EU** *EMV Directive 2014/30/EU* **RoHS-Richtlinie 2011/65/EU** *RoHS- Directive 2011/65/EU*

Angewandte harmonisierte Normen, insbesondere: *Applied harmonized standards, in specific:*	**EN ISO 12100:2010** **EN 60335-2-69:2012** **EN 55014-1:2017+A11:2020** **EN 55014-2:2015** **EN IEC 61000-3-2:2019** **EN 61000-3-3:2013+A1:2019** **EN IEC 63000:2018**

Bei einer Änderung dieser Maschine verliert diese Erklärung ihre Gültigkeit. Die speziellen technischen Unterlagen nach Anhang VII Teil A sind für die Maschine erstellt worden.

This declaration loses its validity if this machine is modified. The specific technical documentation in accordance with Annex VII, Part A has been prepared for the machine.

Hersteller:
Manufacturer
High Tech Grinding Systems Co., Ltd
Fujian Xingyi Intelligent Equipment Co., Ltd
Factory: NO.34, Juxian Road, AnPing Development Area, Jinjiang, China

Exklusiver Vertriebspartner:
Exclusive distribution partner
HTG Europe GmbH
Im Fisserhook 7, 46395 Bocholt, Deutschland

Bocholt, 19.03.2026

HTG EUROPE GMBH
IM FISSERHOOK 7
46395 BOCHOLT | GERMANY

Peter Bußmann – HTG Europe GmbH - Managing director

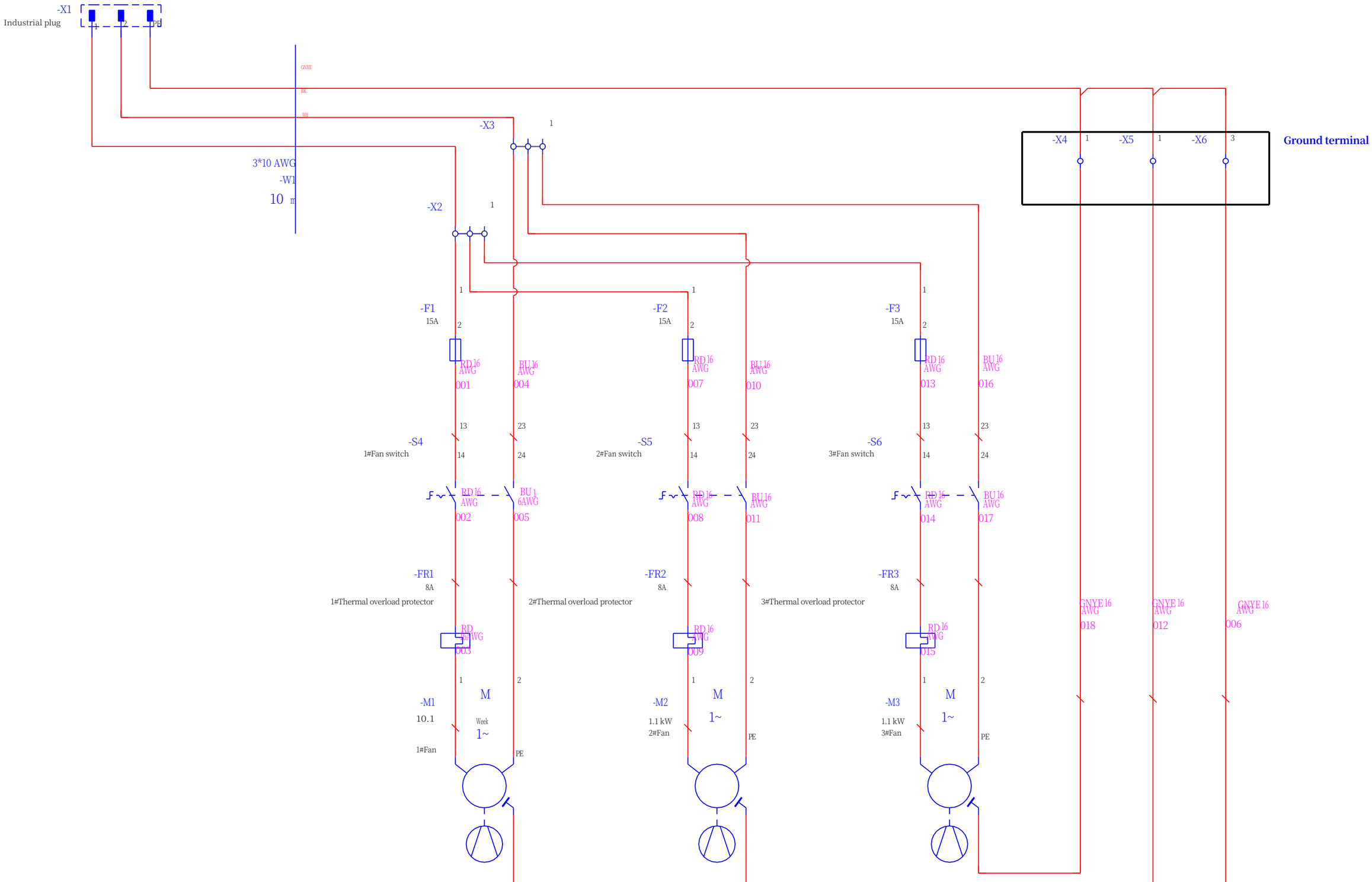

Next page 2

Drawing	Huang Xiaoming	Date of Drawing	August 29, 2025	Modified Date	August 29, 2025
Proofread		Proofreading Date			
Review		Review Date			
Approved		Approval Date			

IVC-V3 ULTRA Vacuum Cleaner - 1P 220V - Amedeg 3.3kW - Germany - V1.0.0

Control Circuit Schematic

=

+

Current Page 1
Page 1/ 2

IEC_tpl001

number:

Version

Cable

F09_003

Diagram

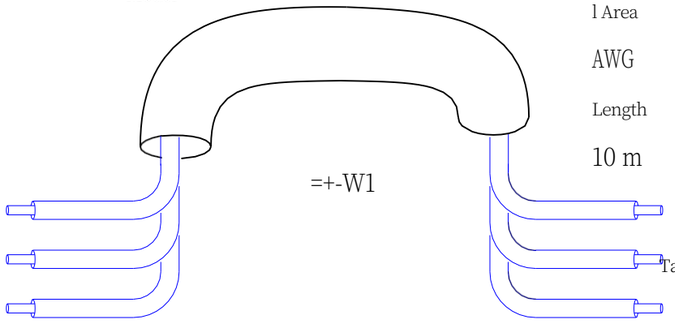

Number of Conductors	Cable Model	Cross-sectional Area AWG	Length	Function text
			10 m	

Functional text	Related references	Target Description Object	Target description basis	Related References	Functional text
	/1.3	-X3:1	-X1:2	/1.0	Industrial plug
3# Fan	/1.6	-M3:PE	-X1:PE	/1.0	=
	/1.3	-X2:1	-X1:1	/1.0	=

Notes

This operating manual is the property of:	HTG Europe GmbH Im Fisserhook 7 D-46395 Bocholt
	Revision 1 March 18, 2026

© 2026

The copyright to this document and all attachments remains the property of HTG Europe GmbH at all times. The customer is authorized to use and reproduce this document solely for its intended purpose. Any violations shall result in liability for damages.